DWG. SIZE	DWG. NO.
D	031–5261

REVISIONS

SYM.	E.C.N.	DATE	APVD.
A	24467	1/4/01	
	REDRAWN ON CAD		

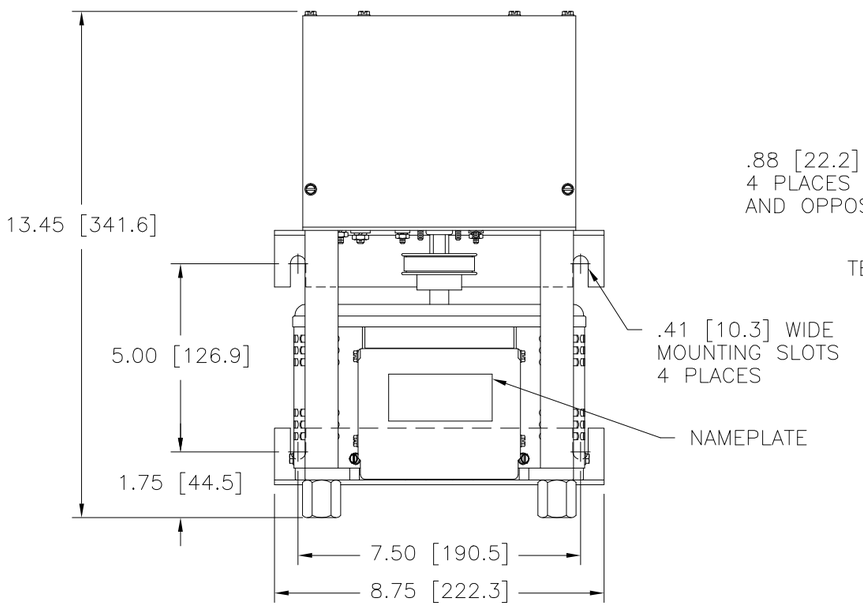

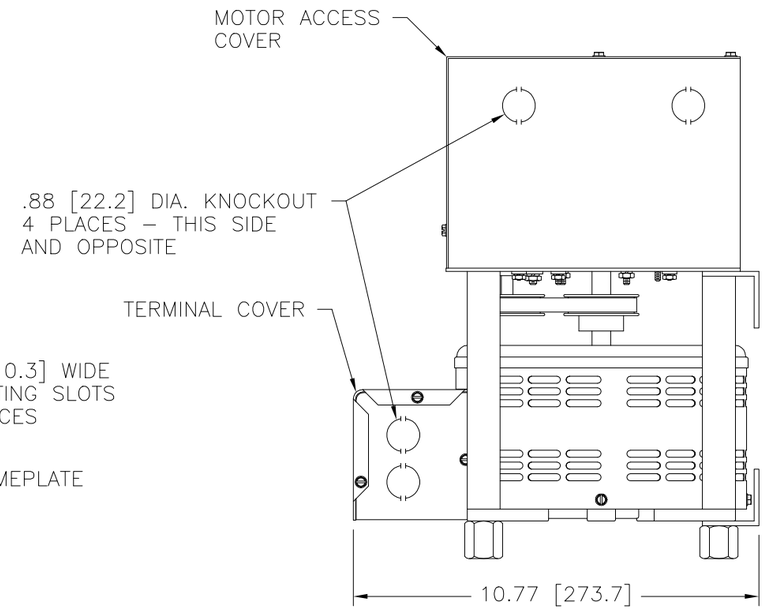

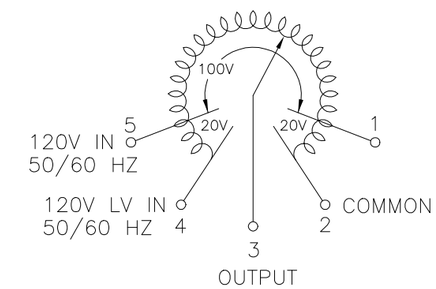

COIL SCHEMATIC
AS VIEWED FROM BASE END
FUSE RECOMMENDED BUT
NOT SUPPLIED

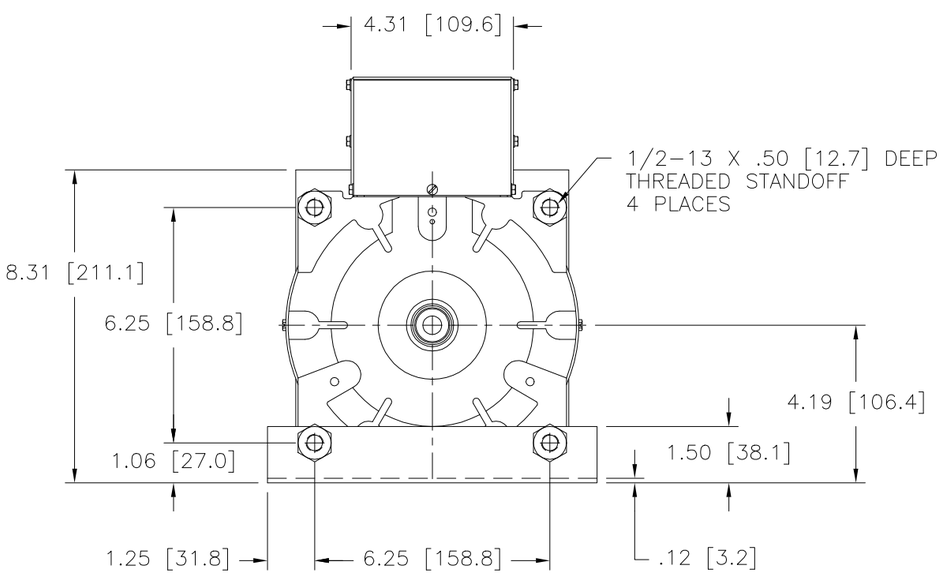

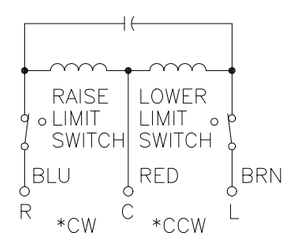

MOTOR CIRCUIT
120V, 50/60 HZ
* ROTATION AS VIEWED
FROM MOTOR END
MOTOR SPEED: SEE CHART

+ MOTOR DRIVEN UNITS USE TERMINAL CONNECTIONS FOR CCW INCREASING VOLTAGE, AS VIEWED FROM THE BASE END.

SPEED (SECONDS)	MODEL NUMBER
5	5M2510CT
15	15M2510CT
30	30M2510CT
60	60M2510CT

SPECIFICATIONS

WIRING	INPUT VOLTS	INPUT HERTZ	OUTPUT VOLTS	CONSTANT CURRENT LOAD MAX. AMPS	CONSTANT CURRENT LOAD MAX. KVA	CONSTANT IMPEDANCE LOAD MAX. AMPS	CONSTANT IMPEDANCE LOAD MAX. KVA	SHAFT ROTATION TO INCREASE VOLTAGE	TERMINAL CONNECTIONS FOR INCREASING VOLTAGE AS VIEWED FROM BASE END + INPUT	JUMPER	OUTPUT
SINGLE PHASE	120	50/60	0–120	25	3.00	30	3.6	CW	2–4	———	4–3
								CCW	2–4	———	2–3
			0–140	25	3.50	———	———	CW	1–4	———	4–3
								CCW	2–5	———	2–3

UNLESS OTHERWISE SPECIFIED. TOLERANCE IS ±
DECIMALS .XX .06 .XXX .005 HOLES .01 ANGLES 1° DRAFT 1–1/2°

UNITS IN [mm]

ALL DIMENSIONS APPLY AFTER PLATING

MATERIAL :

TITLE: SPEC. CONTROL DRAWING
VARIABLE TRANSFORMER
MODEL: M2510CT

STACO ENERGY PRODUCTS CO.
A COMPONENTS CORPORATION OF AMERICA COMPANY
DAYTON, OHIO U.S.A.

The information and design disclosed herein was originated by and is the property of STACO ENERGY PRODUCTS CO., which reserves all patent, proprietary, design, manufacturing, reproduction, use and sale rights thereto, and to any article disclosed therein except to the extent rights are expressly granted to others. The foregoing does not apply to vendor proprietary parts.

DRAWN BY S.A. SMITH	DATE 1/4/2001	FIRST USED ON	DO NOT SCALE DWG.	CUSTOMER APPROVAL	DATE
CHECKER	DATE	WEIGHT APPROX. 31 LBS	CODE IDENT. NO. 83008	DWG. SIZE D	DWG. NO. 031–5261
ENGINEER	DATE	SCALE 1/2	SHEET 1 OF 1		